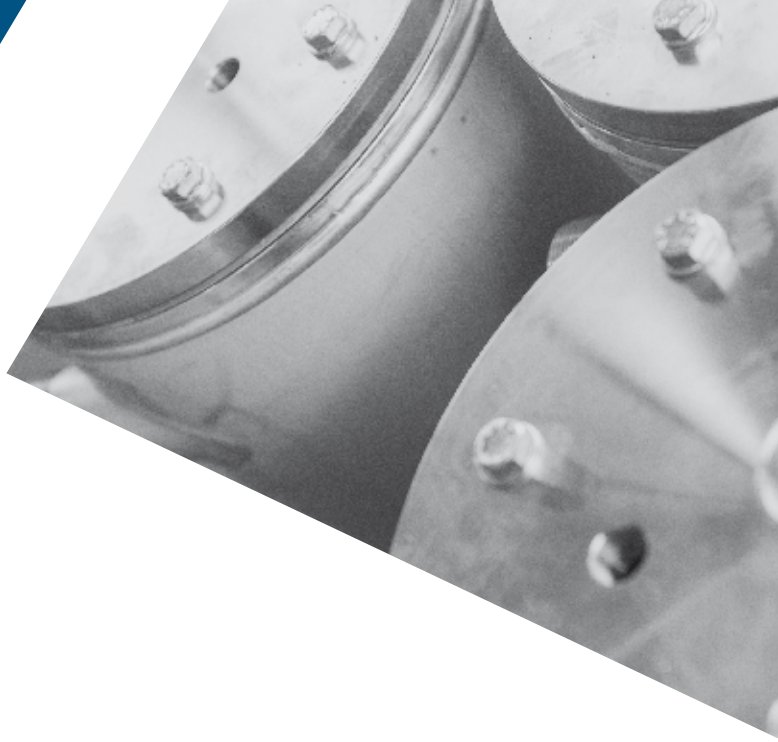

baglioni

pressure solutions

www.baglionispa.com

Special Pressure Equipment

division

baglioni

pressure solutions

SPE division

SPE is the division of Baglioni Group which designs, industrializes and manages tailor made pressure vessels. The acronym, which stands for Special Pressure Equipment, indicates the vast field of applications in which it is able to operate.

An SPE product is:
1. A custom-made vessel
2. Contains fluid under pressure
3. Requires approval and international certification

SPE is a young and dynamic reality, highly experienced (the first custom was fabricated in 1986) and with a particular aptitude for international business. The principal characteristics are: attention to client communication, competitiveness and sustainability of its services, the creation of partnership with its stakeholders and the particular care taken in all technical details.

The aforesaid details have permitted SPE to become partner in the leading companies operating in the pressurized air sector, with a growth trend superior to 20% annually in the past 10 years. Today, SPE looks to new areas with the same approach and professionalism which it has built up over the years.

INTERNATIONAL production

Many SPE products are placed in a global context but are often managed with production located in the continent of use.

The structure of the division consists of a headquarters in Italy for activities coordination and three production units having a high level of autonomy in Italy, China, and the U.S.A.

This particularly flexible aspect permits SPE to choose the most competitive combination of importation or local production and to provide the best logistic service to its clients.

AIRCOM
Via Leopardi, 27
28060 SAN PIETRO MOSEZZO (NO)
Italy
Tel +39 0321 485611
sales@baglionispa.com

MORGANTON
1 Alfredo Baglioni Drive
Marion, NC 28752
Tel. +1 (828) 652 3704
sales@morgantonpv.com

EURE
Da Mai Wan Industrial Zone
30 Hangqi Rd.Hangtou Nanhui
Shanghai 201316 - P.R. China
Tel +86 21 58225183
sales@baglionispa.com

Design and Customizing

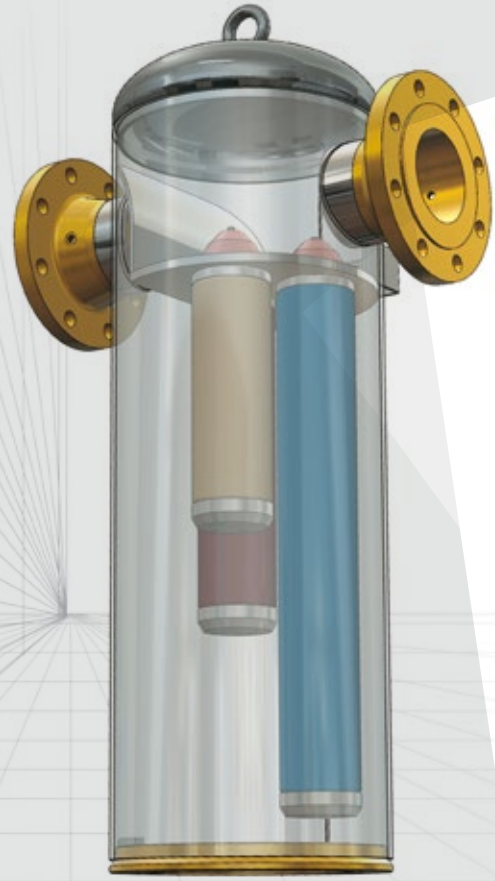

SPE bases its ability to design and co-design on experience which has been acquired in many areas.

The approach with the client's engineering is always proactive so as to optimize and improve the product. For this reason, upon the request of the client it's possible to explore in depth the process aspects, upstream and downstream, of the vessel's intended use.

In regards to global projects, SPE can coordinate the design aspect at a central level and then initiate production using the identical product standards in all group locations.

If the project is local, decentralized offices which have their own technical department can work with the client throughout all product design and approval phases.

Certifications

Our products are designed and manufactured according to the applicable European Directives or are in compliance with International Standards such as:

- *Directive 2014/29/UE SPVD (Ex 2009/105/EC)*
- *Directive 2014/68/UE PED (Ex 97/23/EC)*
- *ASME Sect. VIII Div. 1 /Div.2*
- *National Board Registration*
- *Canadian Registry Number (CRN)*
- *Australian Standard AS1210*
- *MOM Singapore Regulation*
- *DOSH Malaysia Regulation*
- *Visa :*
  - *Tunisia*
  - *Morocco*
- *Manufacture License of Special Equipment (People's Republic of China)*
- *MHLW Japan Regulation*
- *Israeli Standard Regulation*
- *Croatia Registration*
- *CU/TR 032 EAC*

SPE may offer for its products also Marine Registration with Classification Societies as:

- *ABS American Bureau of Shipping*
- *DNV Det Norske Veritas*
- *B.V. Bureau Veritas*
- *LRS Lloyd's Register of Naval Ship*
- *RINA Services*
- *GL Germanischer Lloyd*
- *NK Nippon Kaiji Kyokai*
- *RMRS Russian Maritime Register of Shipping*
- *KR Korean Register of Shipping*

Logistics

The logistics of SPE was created to manage the customized product with simplicity and flexibility. Over the years, SPE has developed various methods of stock management able to adapt to each single requirement; from a single product order to repeat orders, kanban to inventory control. Such processes are constantly monitored by a team of specialists who can react quickly to customer inquiries. Each customer is assigned an internal manager in charge of coordinating all operational needs.

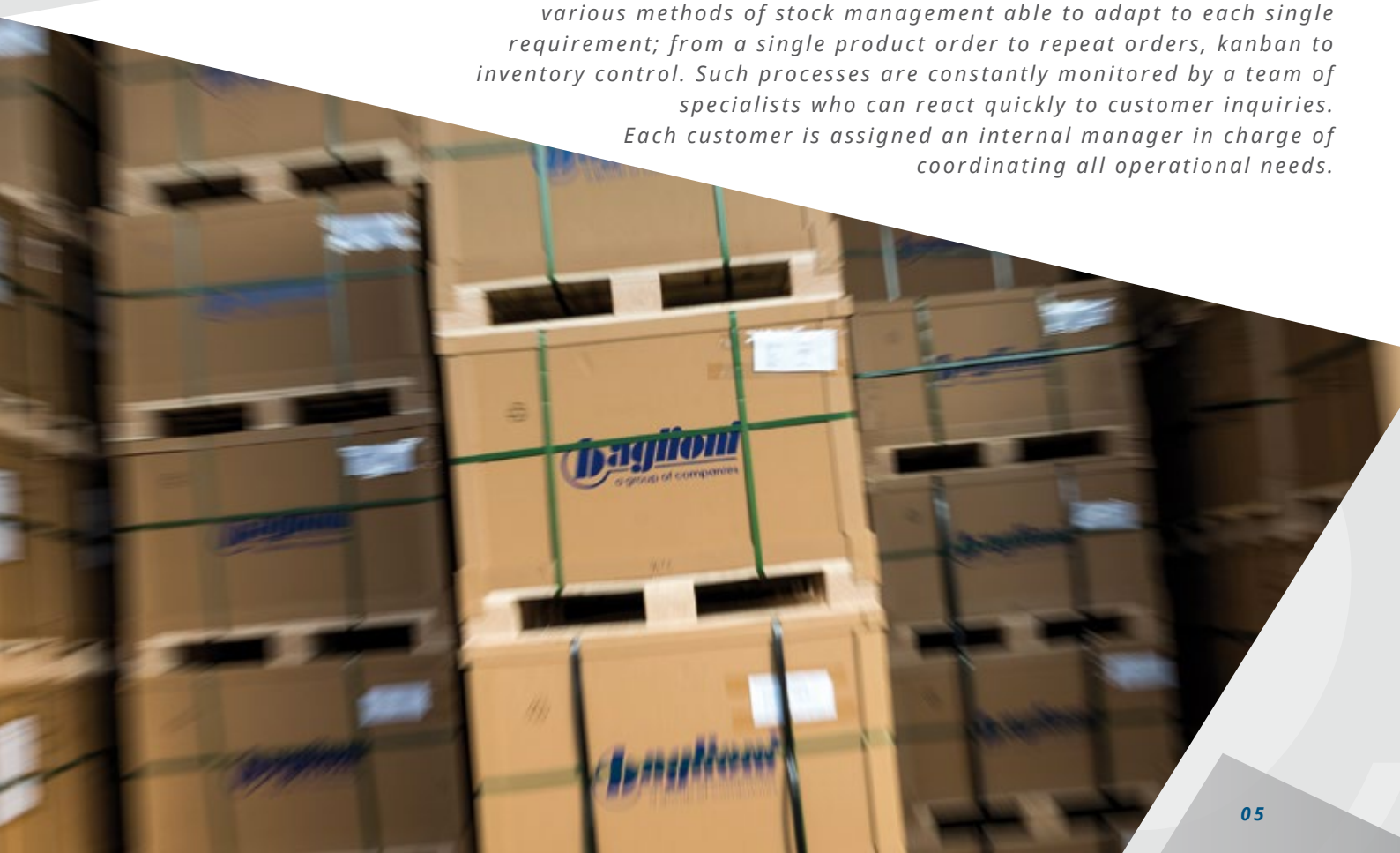

Carbon Steel
Stainless Steel

SPE also works on one-off orders or small-to-medium series, typically for applications outside of its core sectors. The principle ones are: oil & gas, air conditioning, oil filtration, and filtration of sludge in fluids in movement.

SPE is experienced in working both carbon steel and stainless steel.
The ability to handle both one-off orders and medium-to-large series ensures the customer flexibility and production capacity which can vary according to each individual request.

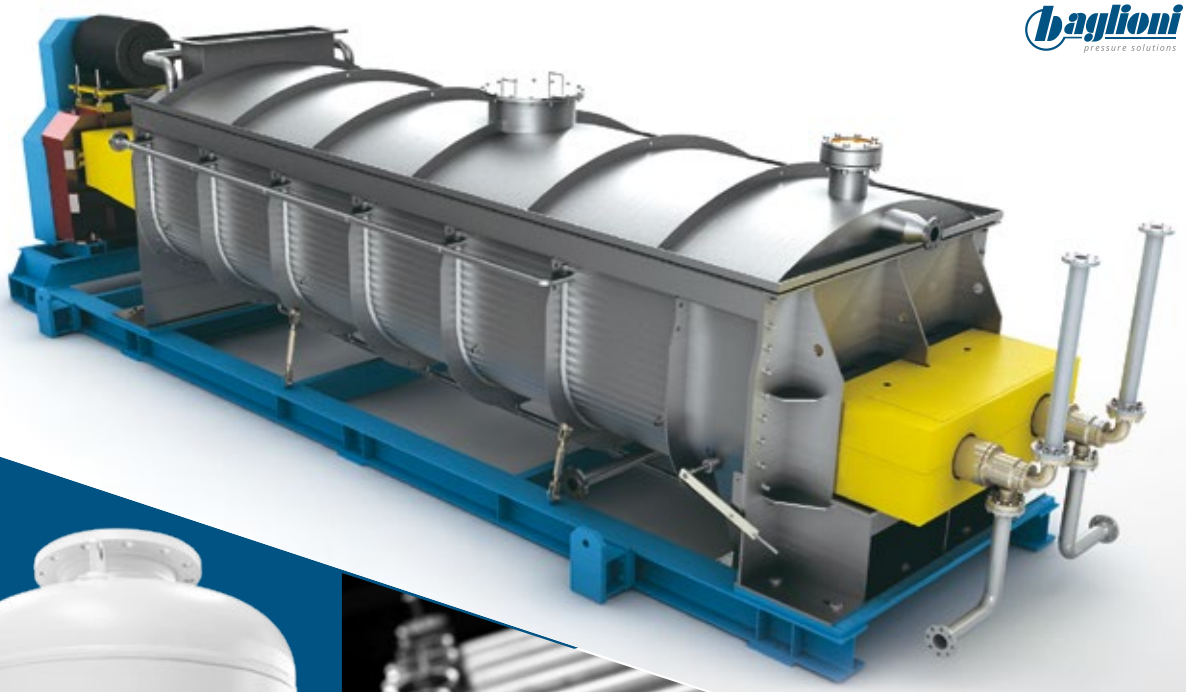

thermal oil heater blades, stainless steel

vessel for compressed air with flange and handhole

vessel for air conditioning systems

self cleaning reactor fiter, stainless steel

PRESSURE SWING adsorption PSA

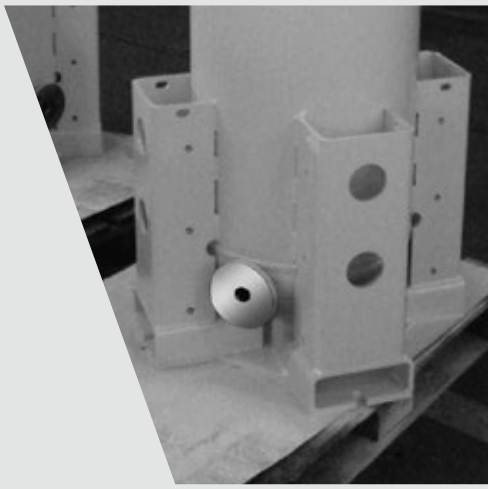

Vessels for PSA are used in Pressure Swing Adsorption installations.

PSA is a technology used to separate certain types of gas from a gas mixture under pressure.
The process takes place at room temperature by means of special absorbent materials such as zeolites, which are used as a molecular sieve.

SPE builds vessels and base frames for two or more towers and can offer a pre-assembly service if requested by the client.

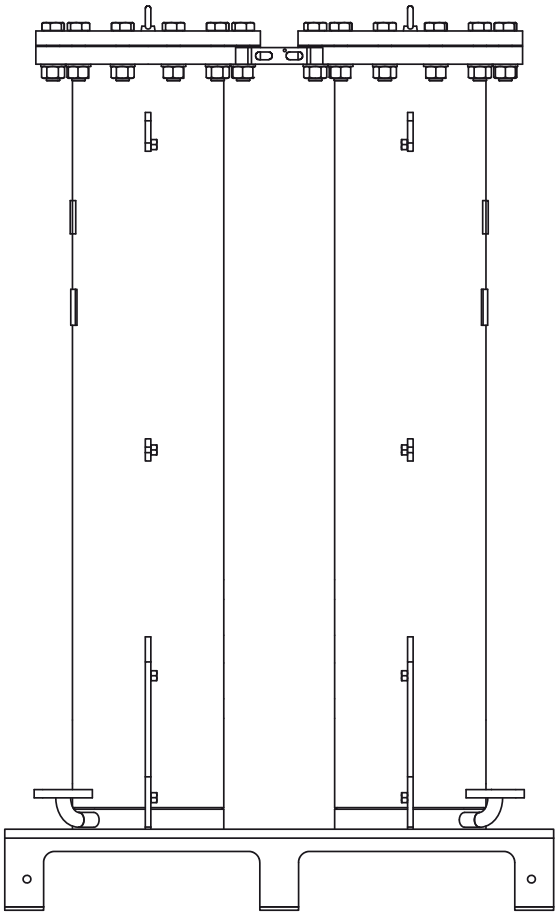

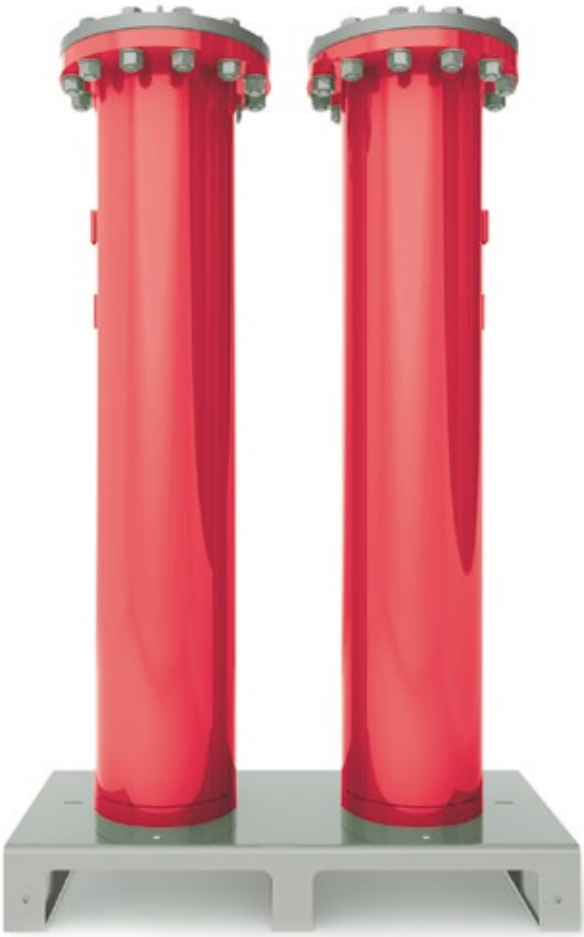

BLOWERS

Vessels for blowers are used in installations for conveying gas at low pressure and are the final application for various types of implementations:

from pneumatic transport,
to centralized vacuum facilities,
to deaeration systems.

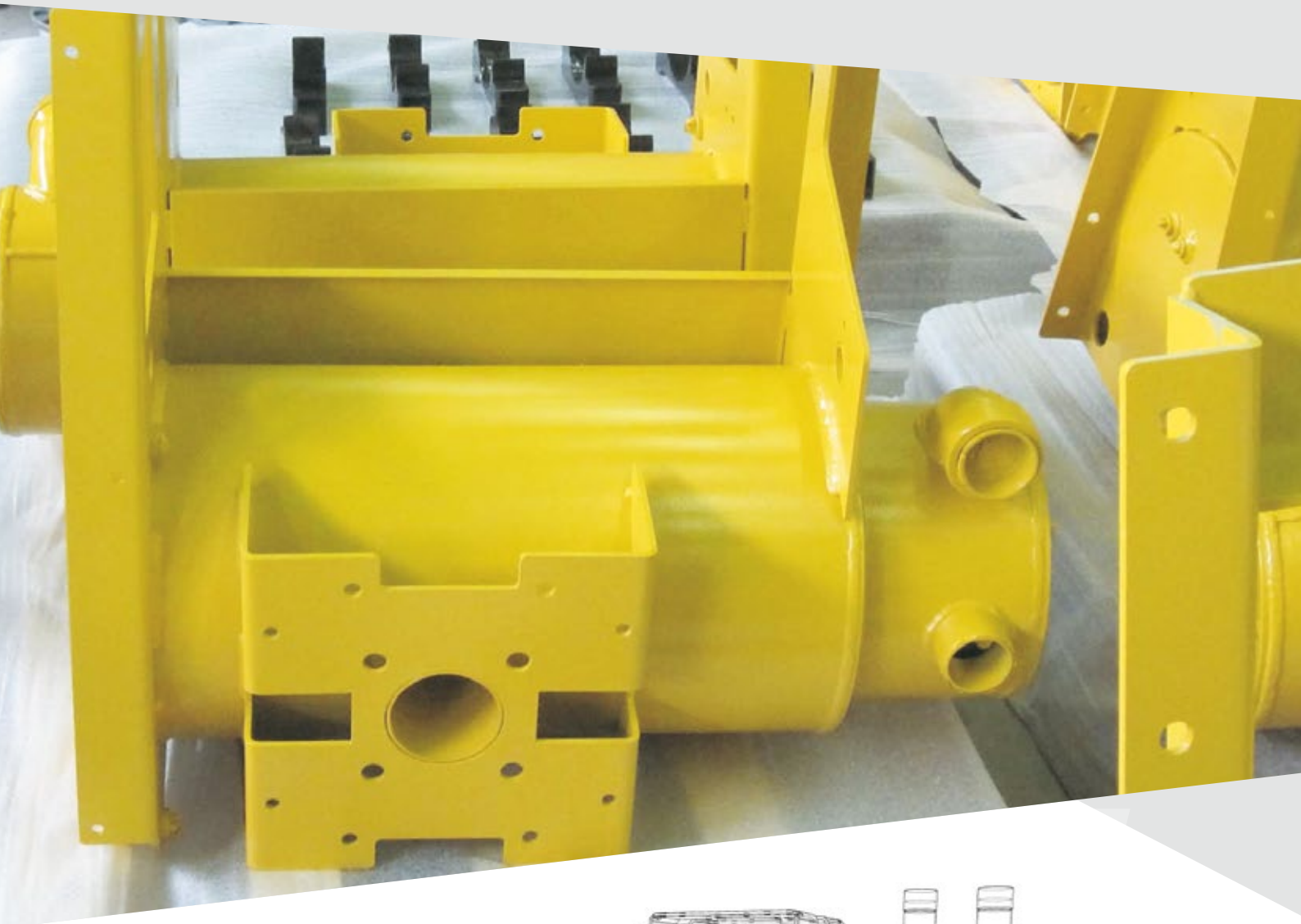

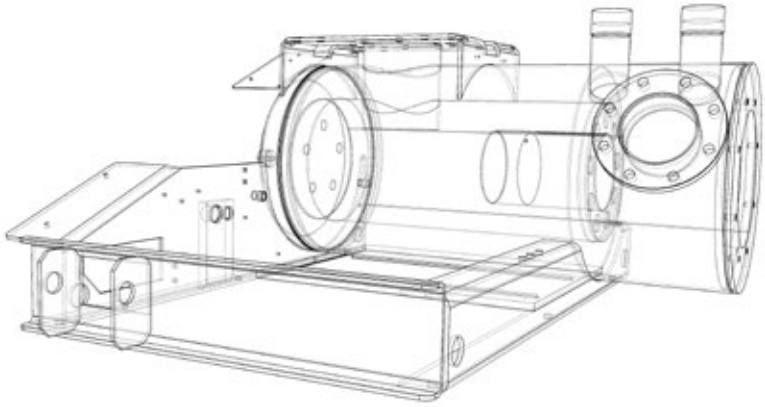

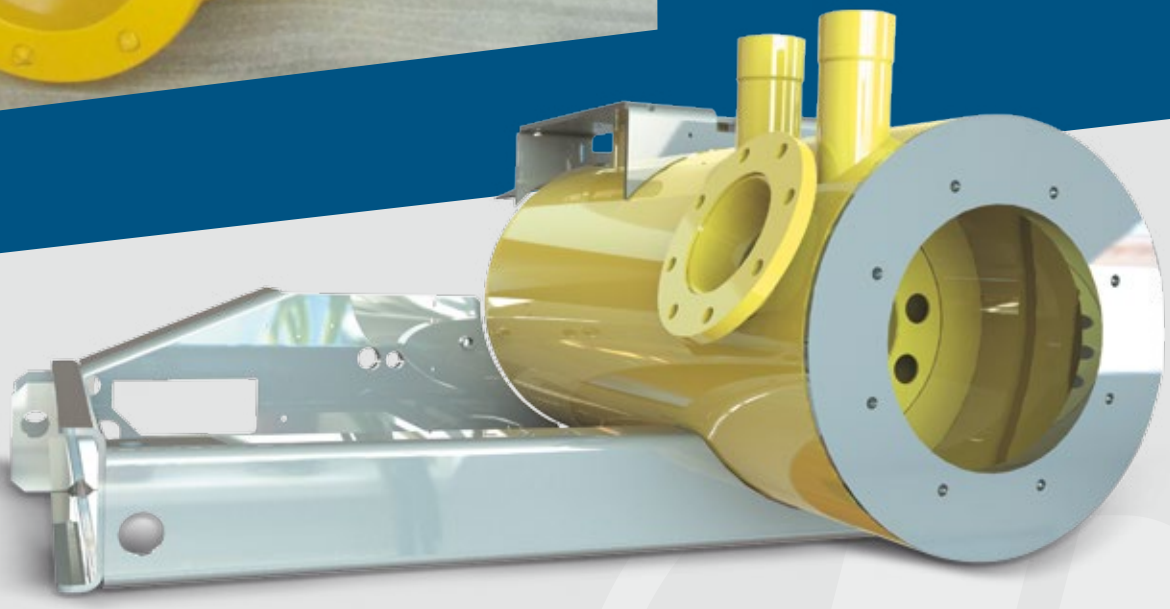

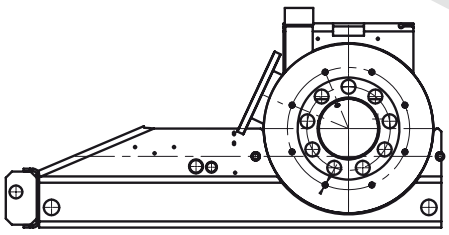

AIR TREATMENT filters

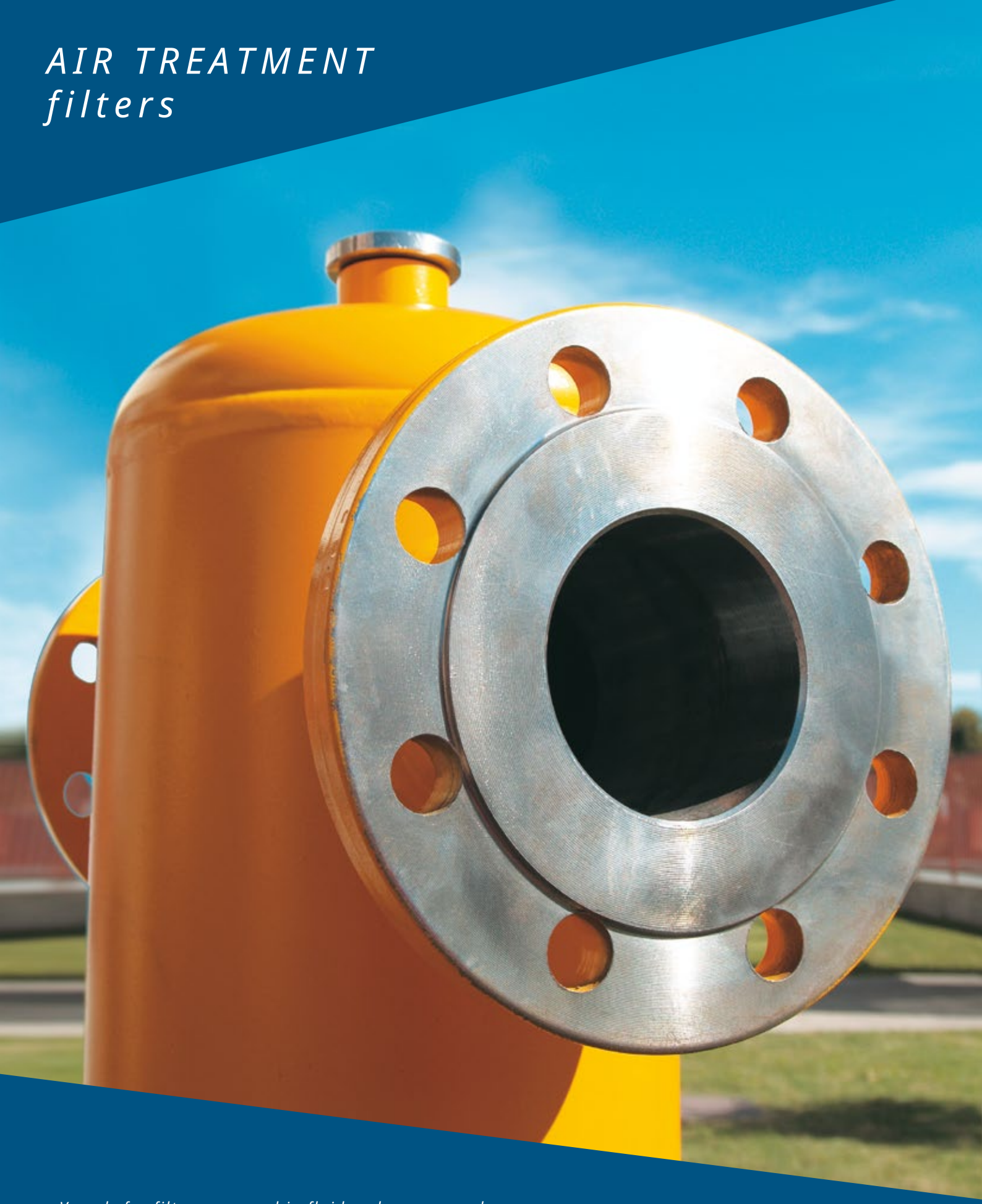

Vessels for filters are used in fluid and compressed gas industrial filtration facilities for both small and large industries. SPE can carry out any type of design, adapting it to the individual specifications of the customer, and can also offer product design support services which are typically aimed at improving the value-for-cost ratio, as well as the performance of the filter over time. SPE can also offer, upon request, coating and surface treatment processes which contribute to ensure the quality of the finished product.

Study of an air-treatment filter

stainless steel filters pickled and passivated or electropolished

SPE can also design solutions in both carbon steel and stainless steel, ensuring quality machining and solutions tailored to the individual needs of each customer for both material types.

stainless steel cartridge filter

carbon steel with KTL treatment

AIR TREATMENT
dryers

Vessels for dryers are used in "adsorption drying" systems. Generally, this is made up of twin towers filled with an absorbent material such as activated alumina, silica gel, molecular sieve or other desiccants.

The two towers operating alternately (one in a drying mode and the other in regeneration) can bring water vapor to dew point in temperatures reaching as low as -40°C.

SPE fabricates vessels and union frames for two or more towers and can also provide a pre-assembly service if requested by the customer.

SEPARATORS

For screw compressors and blade compressors: it's the vessel which conveys the output flow from the compressor, pre-separating oil droplets from the compressed air prior to separation and filtration processes.

The separator is also the site of coalescence filters and control systems which regulate the oil circuits and compressed air in this phase.

Separators upon request may be offered also in stainless steel; it can be the best solution in case of aggressive environment or for air-water systems.

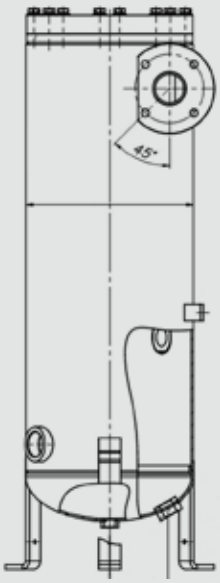

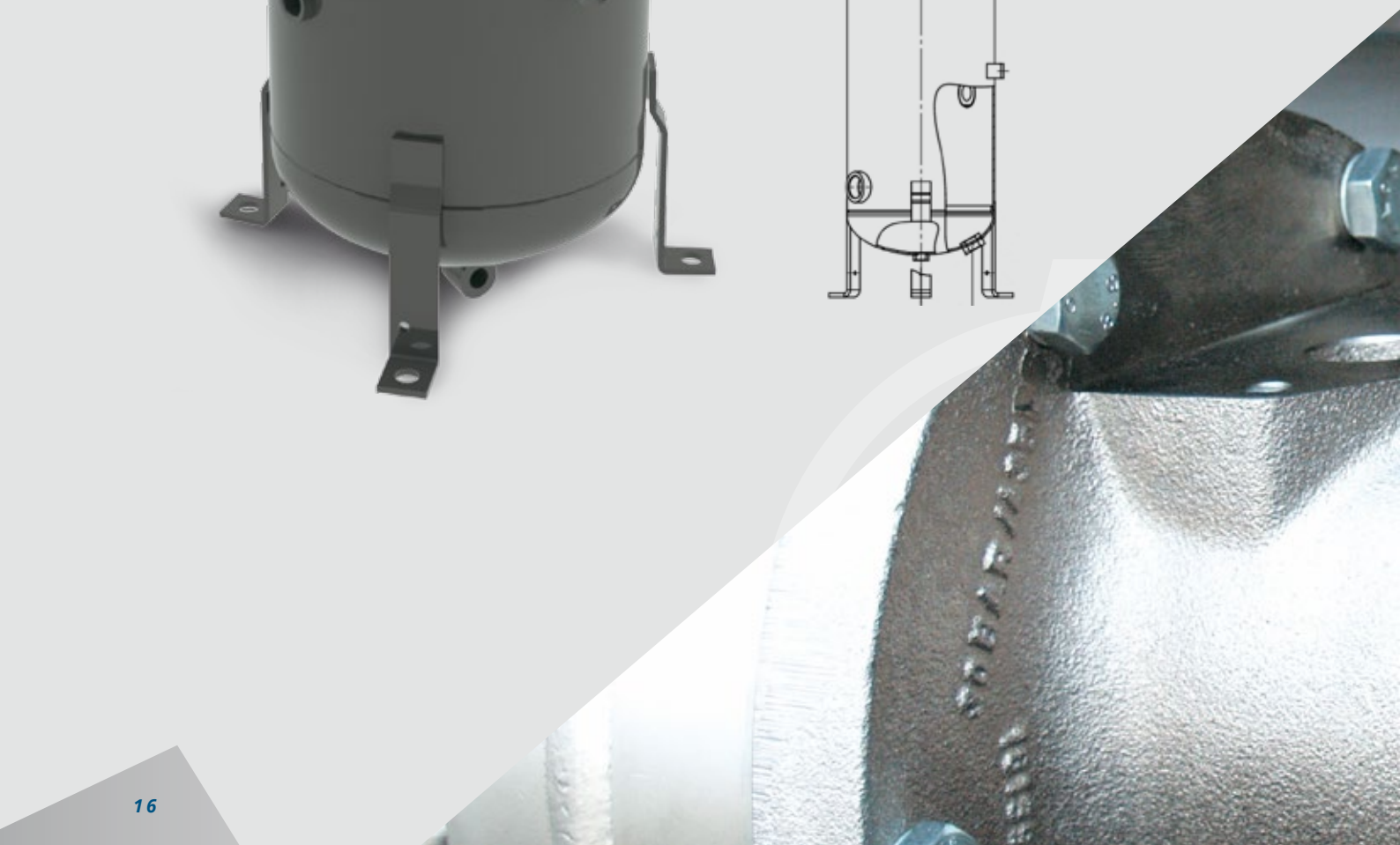

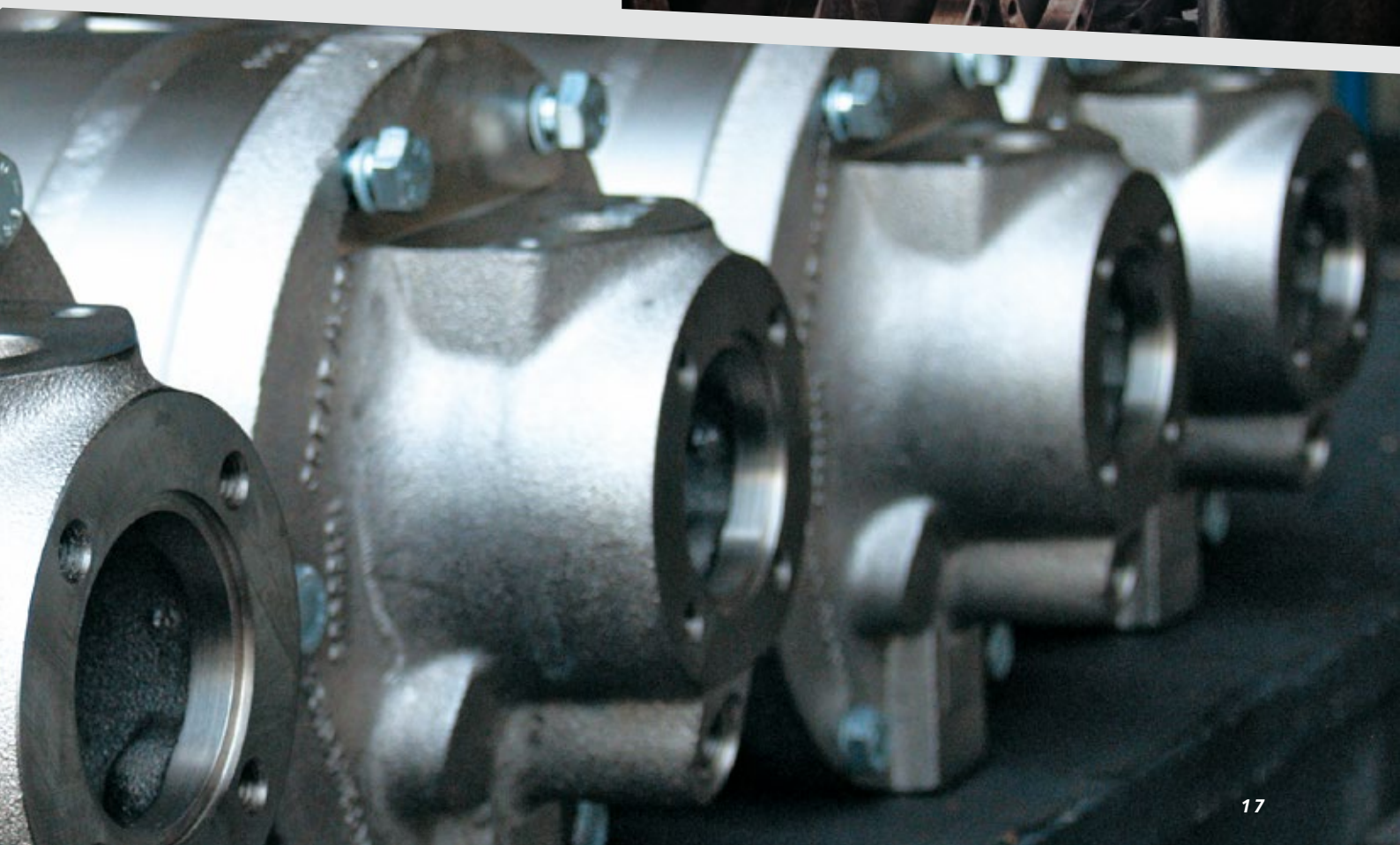

PREASSEMBLY

SPE may also offer to its Customers pre-assembling services for internal components like oil cartridges and filters and external ones like sight glasses, regulating valves, drain systems. The complete unit may be also pressure tested to have a perfect plug and play solution reducing assembling time in Customer production line.

For complex assemblies SPE can also offer customized piping, manufactured and tested together with the product, reducing the time spent by the Customer in correcting tolerances during assembling.

AIR COM baglioni

CSC baglioni

SIAP baglioni

MORGANTON baglioni

COINOX baglioni

AIR COM SHANGHAI baglioni

EURE Shanghai baglioni

ASTRA

zetabi adv

baglioni
pressure solutions

www.baglionispa.com

Baglioni SpA | Via Dante Alighieri, 8
28060 San Pietro Mosezzo | Novara | ITALY
PHONE:+39 0321 485211 - **FAX:**+39 0321 53571